NOsparc® User Manual
MGXDC1F250

This product is manufactured under the following patents: US 9,087,653, US 8,619,395, US 9,423,442, and other patents pending.

Contact Arc Suppressor for DC Power Relays, Contactors, and Micro-Switches

IMPORTANT NOTES

This document provides information required to install a NOsparc arc suppressor.
You must read and understand this document before installing this device.

104-0045B

If you have any trouble with your installation, please refer to Technical Support contact information below.

Full Terms & Conditions and Warranty Available at: www.ArcSuppressionTechnologies.com

CONTACT INFORMATION

Arc Suppression Technologies, 7900 International Drive, Suite 300, Bloomington, MN 55425-2562 USA
+1 (612) 928-5269 // info@ArcSuppressionTechnologies.com // www.ArcSuppressionTechnologies.com

TABLE OF CONTENTS

APPLICABLE DOCUMENTS

The UL Recognized Component mark shown at right indicates that UL LLC has certified the compliance of the NOsparc units included in this manual as "Component - Auxiliary Devices" for both Canada and the United States, per UL 508 Industrial Control Equipment and CSA-C22.2 No. 14, Industrial Control Equipment.

File No.: E346457

PART NUMBER & PRODUCT DESCRIPTION

Example shown: NOsparc MGXDC1F250

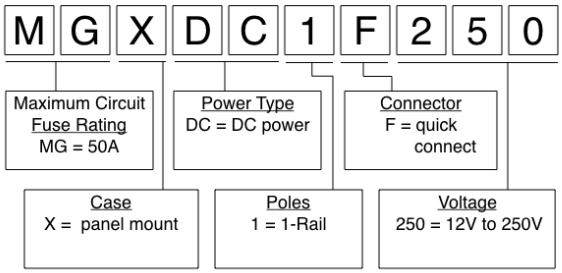

LIFE SUPPORT

Arc Suppression Technologies products are specifically NOT authorized for use as critical components in life support devices or systems without the express written approval of the Chief Executive Officer of Arc Suppression Technologies.

As used herein:

Life support devices or systems are devices or systems which support or sustain life and whose failure to perform when properly used in accordance with instructions for use provided in the labeling can be reasonably expected to result in significant injury to the user.

A critical component is any component in a life support device or system whose failure to perform can be reasonably expected to cause the failure of the life support device or to affect its safety or effectiveness.

LEGAL NOTICE

Information in this document is believed to be accurate and is provided solely in connection with Arc Suppression Technologies products.

Arc Suppression Technologies makes no warranties, expressed or implied, regarding the information contained herein.

Arc Suppression Technologies assumes no liability for errors and omissions that may occur in this document.

Arc Suppression Technologies reserves the right to make changes, corrections, modifications or improvements, to this document and the product described herein at any time, without notice.

This product is sold pursuant to Arc Suppression Technologies' terms and conditions of sale. This product is resold under the terms and conditions of distributors, representatives, and value-added resellers

Arc Suppression Technologies assumes no liability otherwise arising from the application or use of any such information or product for any infringement of patents or other intellectual property rights owned by others, which may result from such application, or use.

Purchasers are solely responsible for the choice, selection and use of the product described herein, and Arc Suppression Technologies assumes no liability whatsoever relating to the choice, selection or use of this product.

No license, expressed or implied, by estoppel or otherwise, to any intellectual property rights is granted under this document. If any part of this document refers to any third party products or services it shall not be deemed a license grant by Arc Suppression Technologies for the use of such third party products or services, or any intellectual property contained herein or considered as a warranty covering the use in any manner whatsoever of such third party products or services or any intellectual property contained therein.

Arc Suppression Technologies only accepts products for repair or return that are accompanied by a Return Material Authorization number from either our company or the appropriate distributor or sales representative.

Please refer to your original purchase agreement or contact your distributor or sales representative for return policy information.

SAFETY INFORMATION OVERVIEW

We use note, caution and warning symbols throughout this book to draw your attention to important operational and safety information.

"WARNING" describes an alert with information that is important for protecting personnel and equipment from damage.

"CAUTION" describes any condition that could result in damage to the equipment or result in physical harm to personnel.

The CAUTION or WARNING "SAFETY" alert symbol (an exclamation mark in a triangle) precedes a general caution or warning statement. It describes safety requirements to meet local, national and international standards.

The Electrical Shock Hazard CAUTION OR WARNING symbol, (a lightning bolt in a triangle) precedes an electric shock hazard. It describes a potential electrical shock hazard which can result in personal injury or death.

"NOTE" describes any item of interest to the user, owner, or operator.

WARNINGS

Disconnect all power to circuits and panels where this product is about to be installed or when installing this product.

Follow extreme caution when applying NOsparc to trip and close contacts or in circuits containing elements that can be energized by a 1/2 power cycle pulse.

This User Manual must be thoroughly understood and accurately followed to avoid unintended equipment operation.

The assembly must conform to National Electric Code (NEC) safety standards, as well as locally applicable codes. Failure to do so could result in personal injury or loss of life. See the product rating curve for wire gauge selection, ambient temperature and current restrictions.

Follow extreme caution when conducting short cycle time tests, especially below the maximum rated cycle time for the associated relay; typically 3s. Even at significantly reduced power levels the relay contacts become extremely hot due to high current densities at the point of contact constriction just before the contact breaks open. Always follow the relay manufacturers specifications and requirements. Standard relays typically have a maximum short period cycle time of 1200 cycles per hour.

Only authorized and qualified personnel should install and service the NOsparc MGXDC1F. Failure to comply with these recommendations may result in damage to equipment and property and injury to personnel.

Always test the function and performance of NOsparc in the intended application.

An arc suppressor DOES NOT eliminate arcing, therefore, NOsparc will not eliminate hazards associated with electrical current contact arcing.

SAFETY

All creepage distances and clearances of NOsparc have been designed to meet requirements of safety standards.

When using NOsparc MGXDC1F, basic safety precautions should always be followed to reduce risk of fire, electric shock, and injury to persons. When installing NOsparc into your system, make sure that the Quick Connect Terminal connector is properly crimped, terminated, insulated and that the proper wire gauge is used and that the connector is securely seated. Incorrect application or termination can result in harmful or fatal electrical shock or component damage.

CAUTIONS

The NOsparc will pass a leakage current (see specifications) even though the contacts across which it is connected are open (similar to leakage present with snubber use). This capacitive leakage current can be sufficient to turn-on some solid state and electromechanical relays, or to cause electric shock to personnel. Therefore:

- The NOsparc must never be connected across relay, contactor, or snap action switch contacts driving high impedance loads.
- The NOsparc must never be connected across relay, contactor, or snap action switch contacts used for galvanic/safety isolation.

Proper care must be taken when handling and installing NOsparc MGXDC1F.

Never plug or unplug NOsparc while powered.

Do not connect NOsparc directly to power!

Use caution when installing or modifying power connections.

NOTES

Connect NOsparc across the power switching relay, contactor, or snap action switch contacts only!

NOsparc capabilities will be fully effective even under mixed load conditions.

NOsparc has been designed to support the following DC power loads:

- General purpose
- Resistive
- Capacitive
- Inductive
- Motor
- Tungsten

DO NOT use NOsparc DC power products for AC power applications.

DO NOT use NOsparc on the following power circuits:

- Non-sinusoidal
- Phase controlled
- Pulse width modulated (PWM)
- Variable Frequency Drive (VFD)

DO NOT connect NOsparc across the following components:

- Fuses
- Circuit breakers
- Safety interlocks
- Thermal limits

DO NOT use NOsparc either above or below its ratings or specifications.

DO NOT operate the contacts to which the NOsparc is attached above or below their ratings or specifications.

DISCLAIMER

All product, product specifications and data are subject to change without notice to improve reliability, function or design or otherwise.

Arc Suppression Technologies, LLC, its affiliates, agents, and employees, and all persons acting on its or their behalf (collectively, "Arc Suppression Technologies"), disclaim any and all liability for any errors, inaccuracies, or incompleteness contained in this User Manual or in any other disclosure relating to any product.

Arc suppression Technologies makes no warranty, representation or guarantee regarding the suitability of the products for any particular purpose or the continuing production of any product. To the maximum extent permitted by applicable law, Arc Suppression Technologies disclaims (i) any and all liability arising out of the application or use of any product, (ii) any and all liability, including without limitation special, consequential or incidental damages, and (iii) any and all implied warranties, including warranties of fitness for particular purpose, non-infringement and merchantability.

Statements regarding the suitability of products for certain types of applications are based on Arc Suppression Technologies' knowledge of typical requirements that are often placed on Arc Suppression Technologies products in generic applications. Such statements are not binding statements about the suitability of products for a particular application. It is the customer's responsibility to validate that a particular product with the properties described in the product specification is suitable for use in a particular application. Parameters provided in data sheets and/or specifications may vary in different applications and performance may vary over time. All operating parameters, including typical parameters, must be validated for each customer application by the customer's technical experts. Product specifications do not expand or otherwise modify Arc Suppression Technologies' terms and conditions of purchase, including but not limited to the warranty expressed therein.

Except as expressly indicated in writing, Arc Suppression Technologies products are not designed for use in medical, life-saving, or life-sustaining applications or for any other application in which the failure of the Arc Suppression Technologies product could result in personal injury or death. Customers using or selling Arc Suppression Technologies products not expressly indicated for use in such applications do so at their own risk.

MATERIAL CATEGORY POLICY

Arc Suppression Technologies, LLC hereby certifies that all its products that are identified as RoHS-Compliant fulfill the definitions and restrictions defined under Directive 2011/65/EU of The European Parliament and of the Council of June 8, 2011 on the restriction of the use of certain hazardous substances in electrical and electronic equipment (EEE) - recast, unless otherwise specified as non-compliant.

WARRANTY

NOsparc arc suppressors are manufactured to high quality standards and backed by a warranty that is included in our Terms and Conditions of Sale that can be found at our website:

http://www.arcsuppressiontechnologies.com/where-to-buy/terms-and-conditions-of-sale/

TECHNICAL SUPPORT

Please contact your distributor or sales representative with technical support and product support questions. Have the NOsparc model number available when contacting your representative.

In certain circumstances, direct product support from Arc Suppression Technologies may be reached via the following communication methods:

support@ArcSuppressionTechnologies.com

www.arcsuppressiontechnologies.com/contact-us/support/

Phone +1 (612) 928-5546

CONDITIONS FOR SERVICE

In the event of a product malfunction, Arc Suppression Technologies or an authorized agent should perform all repairs to a NOsparc arc suppressor. It is the responsibility of users requiring service to report the need for service to their distributor or sales representative.

Any components, devices or other equipment used with or adjacent to a NOsparc arc suppressor is the sole responsibility of the end user and not of Arc Suppression Technologies or any of its agents, resellers, representatives or distributors.

RETURN MATERIAL AUTHORIZATION & PROCESS

1. Authorization prior to returning product is required. Please refer to your original purchase agreement or contact your distributor or sales representative for an RMA number and instructions before returning product.
2. After we receive your return, we will examine it and try to verify the reason for returning it.
3. In cases of manufacturing defect, we will enter a replacement order or issue credit for product returned. In cases of customer misuse, we will request a purchase order to provide replacement product.
4. To return products that are not defective, goods must be in new condition, in the original boxes and they must be returned within 120 days of receipt. A 20 percent restocking charge is applied for all returned stock.
5. Arc Suppression Technologies reserves the right to charge for no trouble found (NTF) returns.

CASE SPECIFICATIONS AND MOUNTING

CASE DIMENSIONS

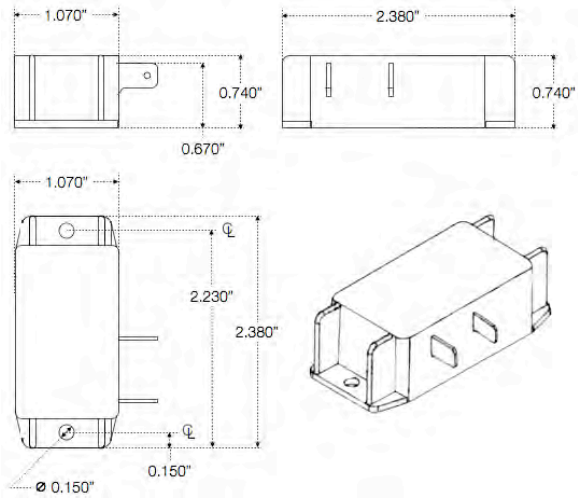

DIN RAIL MOUNTING

DIN rail mounting of one (1), two (2), or three (3) stacked arc suppressors can be accomplished by adding a single DIN rail mounting adaptor (NOT PROVIDED) (accepting up to a 1¾ inch #6 screw) to each side of the single arc suppressor or stacked arc suppressors.

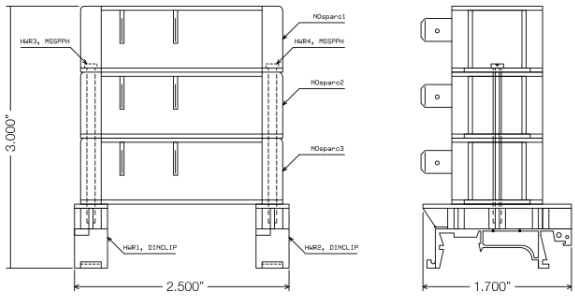

Note: The above images are a representation only. DIN Mounting Clips are available from a variety of suppliers. (One example of an appropriate plastic DIN Rail Mounting Clip is available from Digikey with the part number: 277-2296-ND).

PRODUCT DESCRIPTION

The NOsparc MGXDC1F250 (DC power applications) is a two-terminal contact arc suppressor that attaches across the contact points of a power relay, contactor, or snap action switch. The product is designed to protect the contact points from premature destruction due to contact current arcing. This extends contact life 10X or more depending on application.

In simple terms, NOsparc operates as follows:

1. NOsparc detects the occurrence of an arc event.
2. NOsparc activates to suppress the arc.
3. NOsparc deactivates when the contacts are open and suppression is not required.
4. NOsparc is continuously protected by over-voltage suppression.

DEFINITIONS

Arc Current ..... Plasma flow supported between open contacts

Arc Suppression Duration ..... Time during which the electrical current contact arc is arrested

Arc Suppressor ..... Device designed to reduce contact arcing

Break ..... Action of a contact which transitions from close to open

Bounce ..... One or more brief transition(s) to the OPEN state as the contact is closing or to the CLOSE state as the contact is opening

Break Current ..... Contact current during Break

Cycle Time ..... Time between successive ON or OFF contact states

Inductive Load ..... Motor or transformer form the main part of the load

Inrush Current ..... Resulting turn-on current when powering an inductive, capacitive or tungsten load

Inrush Current Limiter ..... Device intended to limit the amount of turn-on current when powering an inductive, capacitive or tungsten load

Make ..... Action of a contact which transitions from open to close

Make Current ..... Contact current during Make

MOV ..... Metal Oxide Varistor

MTBF ..... Mean-Time-Between-Failures

Power-On Passthrough ..... Current passing through the arc suppressor during initial power-up

RC Snubber ..... Device with resistor and capacitor in series across contact

Snubber ..... Device designed to limit voltage rise times

Suppression ..... Action of minimization of undesired event

Varistor Clamping Voltage ..... Voltage at which steady state current through the arc suppressor is ≥ 1mA

Maximum Varistor DC Voltage ..... Maximum allowed voltage across the arc suppressor (NOT operating voltage)

SPECIFICATIONS

NOsparc Model	MGXDC1F250
ABSOLUTE MAXIMUM CURRENT RATING	75A. This absolute maximum current rating also represents the maximum allowable Locked Rotor Amperage (LRA) for motor loads and the cold filament inrush current for tungsten loads
ARC SUPPRESSION	Duration: 1ms (typical)
CIRCUITS (CONTACTS)	One (1) NOsparc per contact (multiple NOsparc units required for multi-contact relays)
CIRCUIT BREAKER / FUSE (MAXIMUM)	50A for resistive loads (see Safe Operating Area charts next page for more detail)
CLAMPING VOLTAGE	330V (typical at 1mA)
CONTACT CYCLING	Maximum cycle time: per relay specifications (DO NOT EXCEED relay operating specs)
DIMENSIONS	single: length: 2.380in (6.045cm) x width: 1.070in (2.718cm) x height: 0.740in (1.880cm)
ENVIRONMENTAL	operating temperature: -40°C to 85°C (-40°F to 185°F) storage temperature: -50°C to 125°C (-58°F to 257°F) humidity: 5% to 95% (non-condensing)
INTERFACE WIRES	across contacts: two (2) (W1 / W2 non-polarized)
LEAKAGE CURRENT	0.5mA (nominal)
MOUNTING	orientation: any // number of holes: two (2) // hole diameter: 0.150in (#6 screw) (3.81mm)
MTBF / RELIABILITY	2.6 million hours (MIL-HDBK-217F)
OPERATING VOLTAGE (NOMINAL +/-15%)	12Vdc to 250Vdc
POWER-ON	load current passthrough: 1 ms
POWER TYPE	DC (direct current)
TERMINATION	0.250in quick connect male terminals (non-insulated)
TERMINATION MATE	0.250in quick connect female terminals (fully insulated)
WEIGHT	net weight: 1oz (28g)
WIRE GAUGE	wire length between Nosparc and contact terminals: 0in to 24in: #14AWG (minimum) 24in to 36in: #12AWG (minimum) *NOTE: wire lengths over 3 feet are NOT recommended*

CIRCUIT BREAKER / CIRCUIT FUSE DE-RATINGS

The following charts depict the circuit breaker / circuit fuse Safe Operating Area (SOA) for different loads.

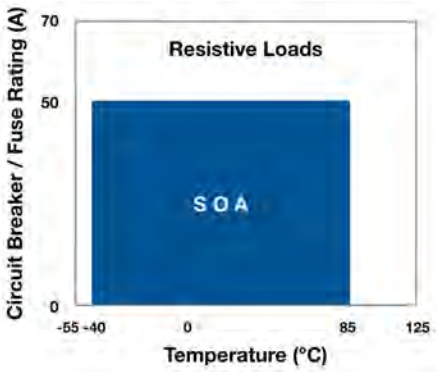

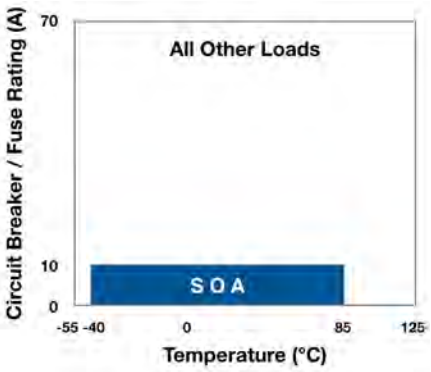

SYSTEM WIRING

Each NOsparc arc suppressor has two male quick connect terminals which must mate with two properly crimped female quick connect terminals.

In order to provide effective arc suppression, the two wires between NOsparc arc suppressor and the relay, contactor, or snap action switch contact terminals should be as short as possible.

One foot or less of wire length is ideal; lengths over 3 feet are not recommended. If longer cable lengths are needed, then the wire gauge must be increased according to the following recommendation based on the length of wire between NOsparc arc suppressor terminals and the contact terminals:

#14AWG (minimum) for less than 24in of wire
#12AWG (minimum) for 24in to 36in of wire

NOsparc Wiring Diagram

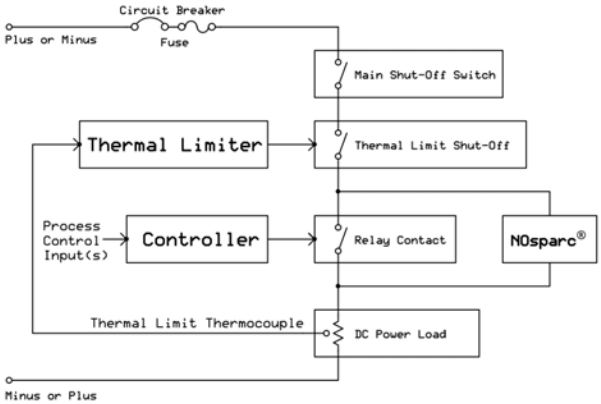

Above: For simplicity, only a single (one) phase shown

IMPORTANT NOTE: Install NOsparc across the contact. <u>DO NOT</u> install NOsparc across the LOAD, POWER, OR COIL.

NOsparc will be damaged if connected across the following locations where there is NO arcing: LOAD, POWER, and/or COIL.

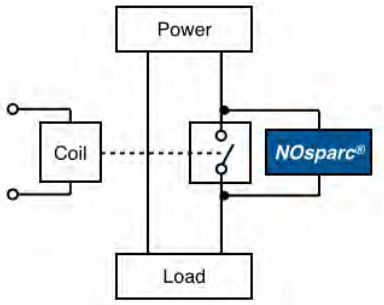

Above: Proper NOsparc wiring across CONTACT.

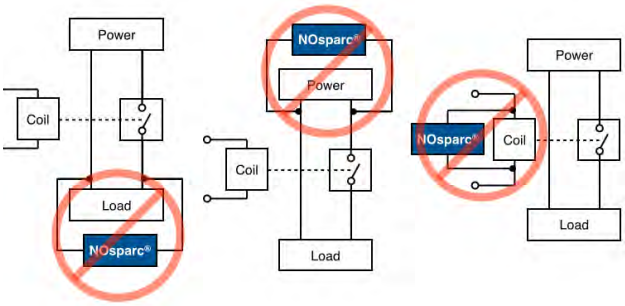

*Above, left to right: **IMPROPER** NOsparc wiring across LOAD, across POWER, and across COIL.*

ARC SUPPRESSION TECHNOLOGIES

CONTACT INFORMATION

ARC SUPPRESSION TECHNOLOGIES
7900 INTERNATIONAL DR STE 300, BLOOMINGTON MN 55425 USA
+1 (612) 928-5269 // info@ArcSuppressionTechnologies.com
www.ArcSuppressionTechnologies.com